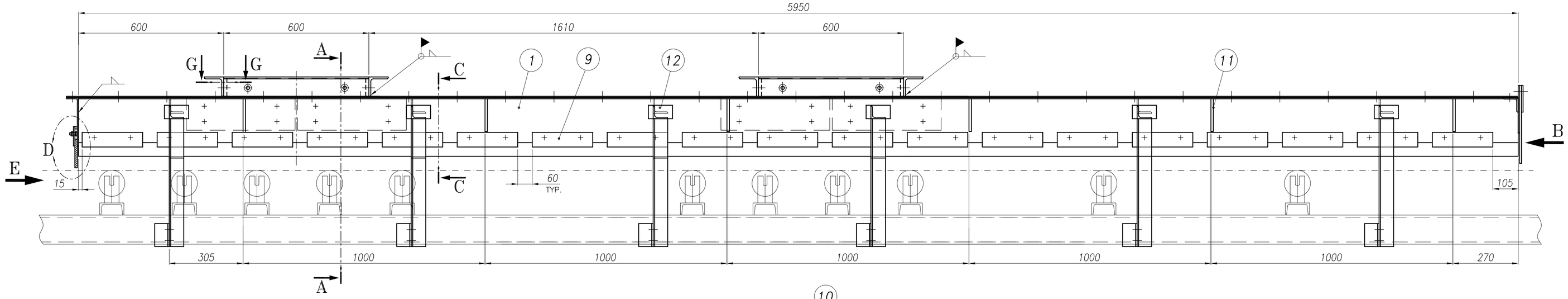

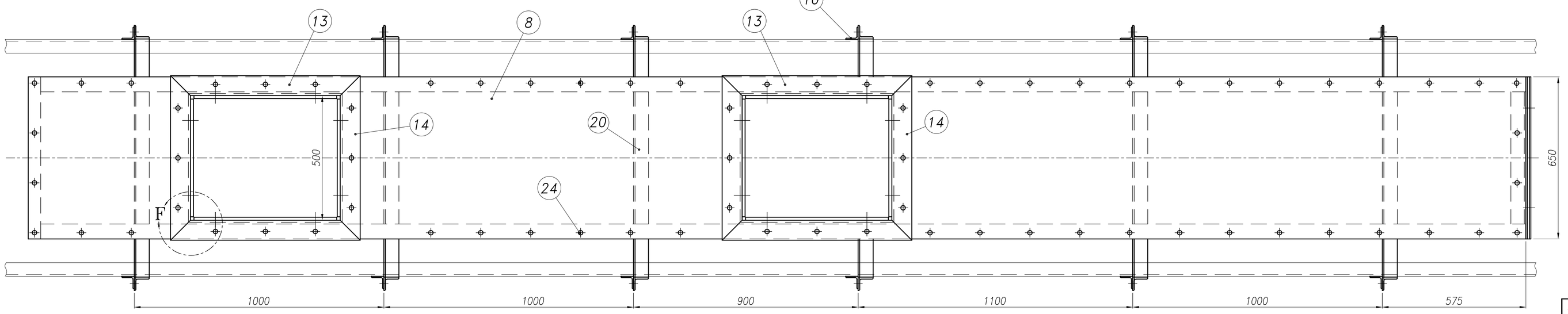

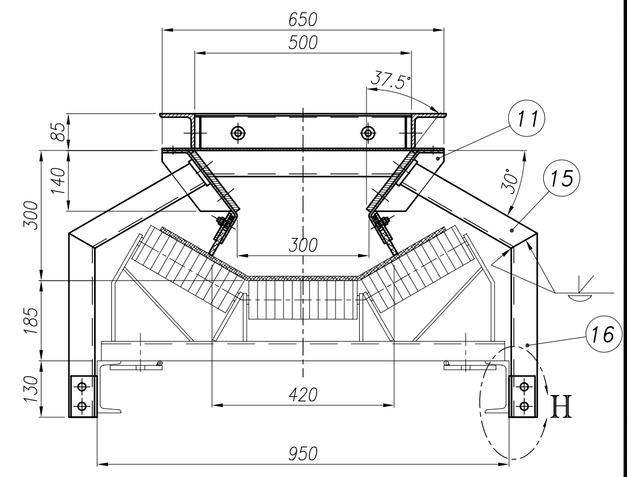

SEC. "A-A"

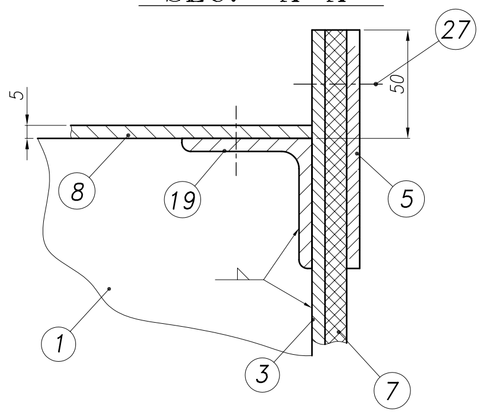

VIEW "B1"

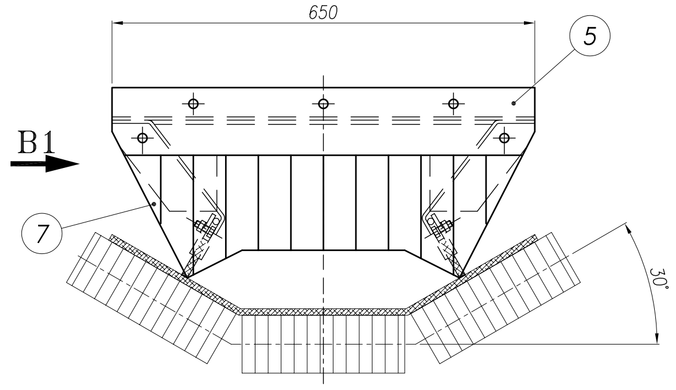

VIEW "B"

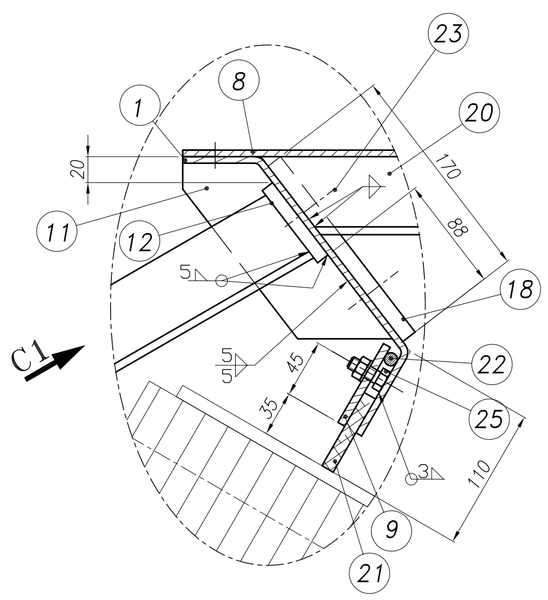

SEC. "C-C"

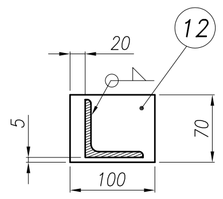

VIEW "C1"

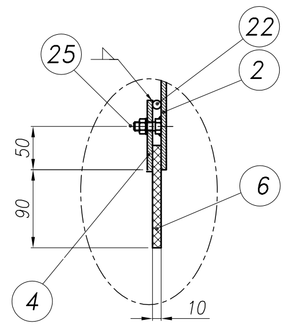

DET. "D"

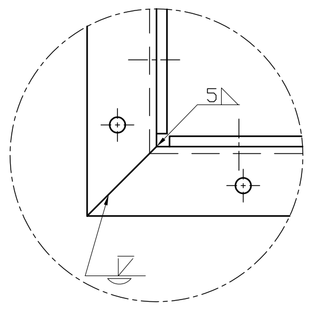

DET. "F"

ITEM NO.	DRAWING NO.	DESCRIPTION	MATERIAL	QUANT.	UNIT WET. =	TOTAL 612 kg	REMARKS
28	--	PL 12x75x472	ST-52	4	3.3	13.2	---
27	--	HEX.SCREW M12x50+N.+W.	8.8,8,St	5	0.08	0.4	DIN933,934,125
26	--	HEX.SCREW M16x45+N.+W.	8.8,8,St	24	0.14	3.36	DIN933,934,125
25	--	HEX.SCREW M8x30+N.+W.	8.8,8,St	80	0.021	1.7	DIN933,934,125
24	--	HEX.SCREW M12x40+N.+W.	8.8,8,St	66	0.07	4.6	DIN933,934,125
23	--	COUNTER SUNK SCREW M12x40+N.+W.	8.8,8,St	32	0.06	1.9	DIN7991,934,125
22	--	RD ø10 L=10000	St 37	-	6.2	6.2	---
21	--	RUBBER 65x12000 t=10	RUBBER	-	15.5	10.3	---
20	--	L60x6 L=530	St 37	5	3	15	---
19	--	L60x6 L=530	St 37	1	2.9	2.9	---
18	--	PL 12x170x450	ST-52	8	7.2	57.6	---
17	--	PL 12x75x572	ST-52	4	5.5	22	---
16	--	L60x6 L=424	St 37	12	2.3	27.6	---
15	--	L60x6 L=330	St 37	12	1.8	21.6	---
14	--	L80x8 L=660	St 37	4	6.3	25.2	---
13	--	L80x8 L=760	St 37	4	7.3	29.2	---
12	--	PL 10x70x100	St37-2	12	0.5	6	---
11	--	PL 10x58x205.5	St37-2	12	0.9	10.8	---
10	--	L60x6 L=95	St 37	12	0.5	6	---
9	--	PL 5x70x250	St37-2	38	0.7	26.6	---
8	--	PL 5x650x6000	St37-2	1	153.1	153.1	---
7	--	RUBBER 292.5x650 t=10	RUBBER	1	3.8	3.8	---
6	--	RUBBER 118x436 t=10	RUBBER	1	1.0	1.0	---
5	--	PL 5x110x650	St37-2	1	2.8	2.8	---
4	--	PL 5x80x436	St37-2	1	1.4	1.4	---
3	--	PL 5x190x650	St37-2	1	4.8	4.8	---
2	--	PL 5x240x650	St37-2	1	6.1	6.1	---
1	--	PL 5x314x5950	St37-2	2	73.3	146.6	---

REV.	DATE	DESCRIPTION	DRAFT	CONTROL	ISSUED FOR ...
03	09.2006	AS SHOWN	EMAMI	KARAMALIAN	FOR CONSTRUCTION
02	04.2006	AS SHOWN	EMAMI	KARAMALIAN	FOR CONSTRUCTION
01	04.2006	GENERAL REVISED	EMAMI	KARAMALIAN	FOR CONSTRUCTION

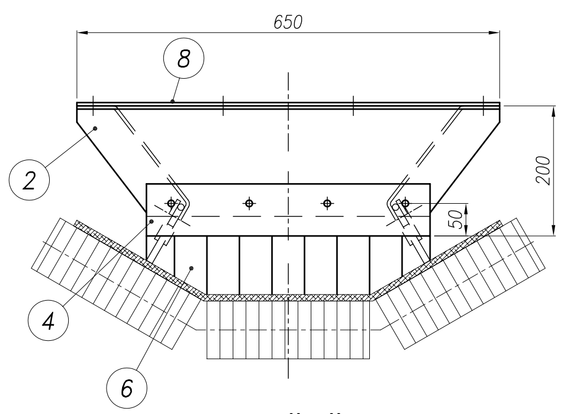

VIEW "E"

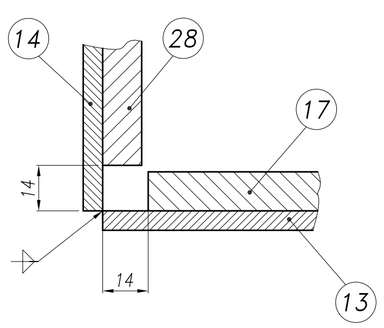

SEC. "G-G"

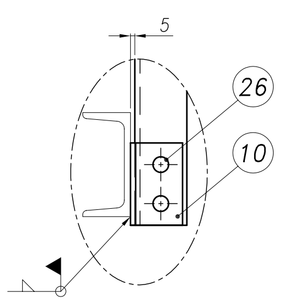

DET. "H"

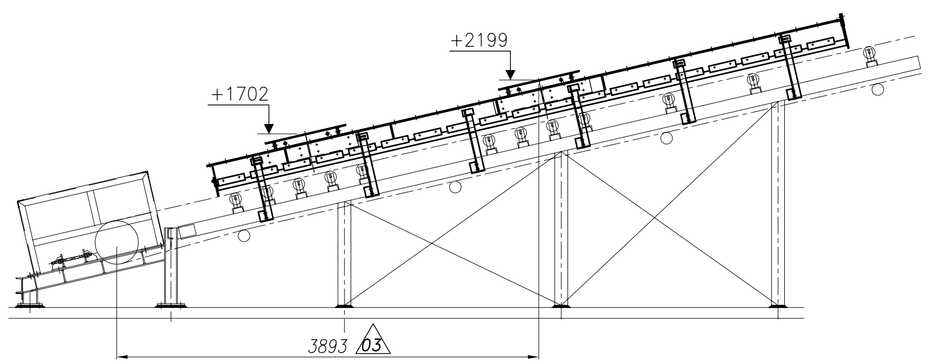

FIELD WELD
(WELDING TO BE DONE DURING FIELD ERECTION)

SHOP WELD
(WELDING TO BE DONE DURING SHOP FABRICATION)

GENERAL NOTES

TO BE APPLIED UNLESS OTHERWISE SPECIFIED ON THE DRAWINGS

SURFACE FINISH ISO 1302	ALL FILLET WELDS 0.7xMIN.THK.
TOLERANCES & FITS: MACHINED SURFACES DIN 7168 "MED" WELDED INSTRUCTION DIN EN ISO 13920 "B"	WELDING ELECTRODE E7018
FLAME CUTTING DIN 2310 CLASS IIB	ALL DIMENSIONS IN MILLIMETER

THE DRAWING(S) AND THE INFORMATION CONTAINED HEREIN ARE THE EXCLUSIVE PROPERTY OF TEIF ENG. CO. AND MUST NOT BE DISCLOSED , COPIED , REPRODUCED OR USED IN ANY MANNER WITHOUT THE PRIOR WRITTEN AUTHORIZATION OF TEIF ENG.CO.

	NAME	SIGN.	DATE
DESIGN	TEIF		
DRAWN	TEIF		
CHECKED	IRAVANI		
APPROVED	JAVADI		

MMTE DRAWING NO.

ZZII MFM02 800

Ref. Dwg. No. ZZII MFM02 000

REV.

D | SHEET 1/2

000 D

ISO/128 Method

EQUIP. NO. CV-MF50

SCALE: 1:10

SIZE: A1

CONT. 0