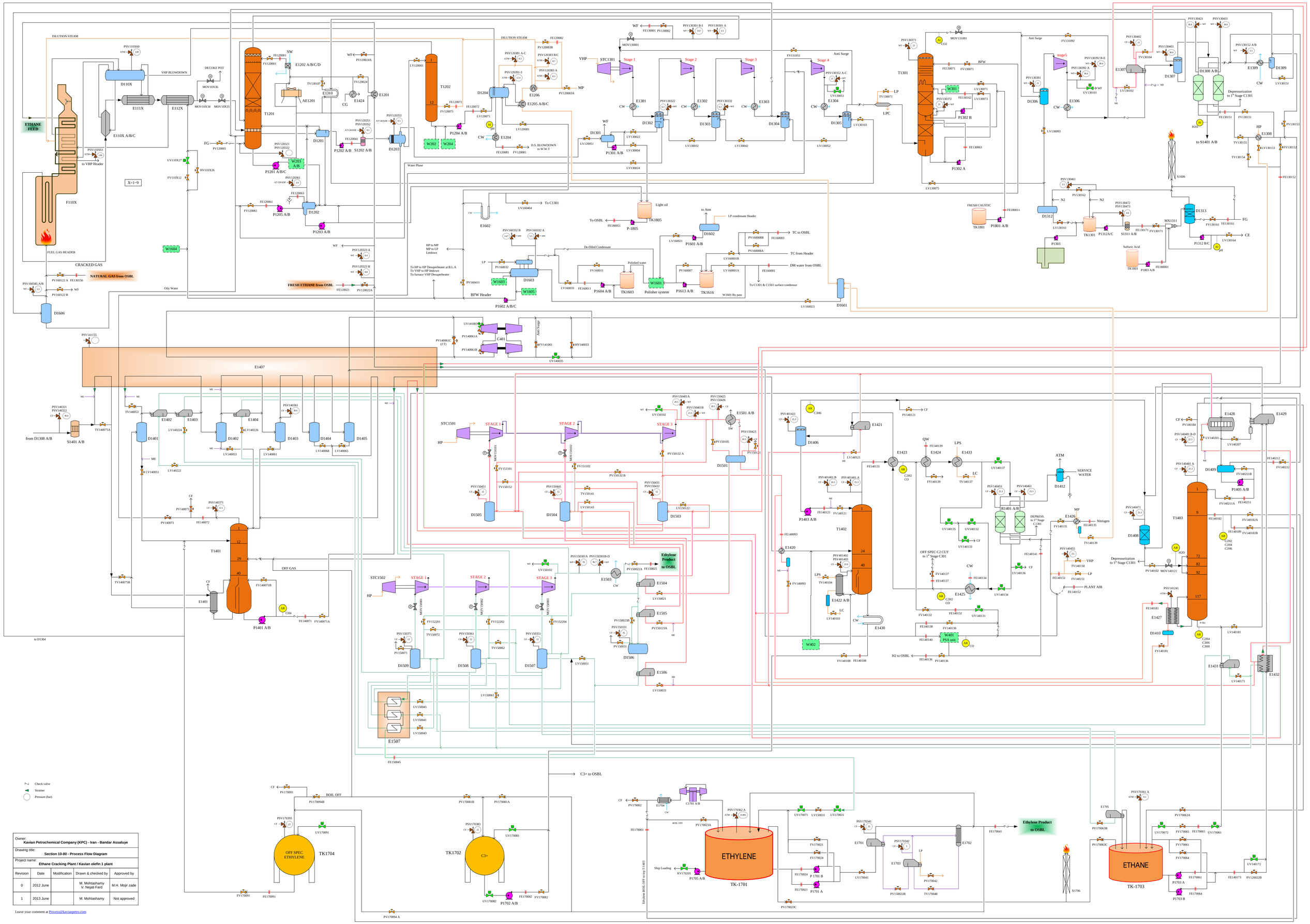

Owner:	Kavian Petrochemical Company (KPC) - Iran - Bandar Assaluye
Drawing title:	Section 10-80 - Process Flow Diagram
Project name:	Ethane Cracking Plant / Kavian olefin 1 plant

Revision	Date	Modification	Drawn & checked by	Approved by
0	2012 June		M. Mohtashamy V. Nejati Fard	M.H. Mojir zade
1	2013 June		M. Mohtashamy	Not approved

Leave your comment at Process@kavianpetro.com